DIMENSION CHART -- STANDARD SIZES

SIMPLIPORT PART NO.	NO. OF WINDOW UNITS	VISION A		MIN. WATER GAGE CENTERS FOR SG777 VALVES C		BODY D		E		G	
		INCHES	MM	INCHES	MM	INCHES	MM	INCHES	MM	INCHES	MM
P3105L	5	10 1/4	(260.3mm)	18 7/8	(479.4mm)	11 7/8	(301.6mm)	12 3/4	(323.9mm)	6 15/16	(176.2mm)
P3106L	6	12 5/8	(320.7mm)	21 1/4	(539.8mm)	14 1/4	(362.0mm)	15 1/4	(384.2mm)	8 1/8	(206.4mm)
P3107L	7	15	(381mm)	23 5/8	(600.1mm)	16 5/8	(422.3mm)	17 1/2	(444.5mm)	9 5/16	(236.4mm)
P3108L	8	17 3/8	(441.3mm)	26	(660.4mm)	19	(482.6mm)	19 7/8	(504.8mm)	10 1/2	(266.7mm)
P3109L	9	19 3/4	(501.7mm)	28 3/8	(720.7mm)	21 3/8	(545.1mm)	22 1/4	(545.1mm)	11 11/16	(296.9mm)
P3110L	10	22 1/8	(562mm)	30 3/4	(781.0mm)	23 3/4	(625.5mm)	24 5/8	(625.5mm)	12 7/8	(327.0mm)

TO BE SPECIFIED BY CUSTOMER		
SIMPLIPORT PART NO.	C	G
ILLUMINATOR PART NO.	HOOD PART NO.	

BILL OF MATERIAL

ITEM	PART NO.	QTY	DESCRIPTION	MATERIAL	DWG. NO.
1	P300*	1	BODY-WELDED ASSEMBLY	STN. STL.	B-14312
2	PW-61	2	GASKET RETAINER	STN.STL.	A-9871
3	PW-77	2	SEALING GASKET	MONEL	A-9865
4	PW-17	2	MICA SHIELD	MICA	PS7008-A
5	PW-18	2	GAGE GLASS	GLASS	A-10419
6	PW-63	2	CUSHION GASKET	COPPER	A-16020
7	PW-64	2	LUG WASHER	STN. STL.	A-10285
8	PW-40	2	SPRING RETAINER	STN. STL.	PS7003-A
9	PW-66	4	SPRING WASHER	STN. STL.	
10	PW-65	2	PACKING NUT	STEEL	PS7156-A
11	X178125	4	HEX-WASHER HD. SCR. 5/16-18 x 1/2	STN. STL.	
12	PW-28	1	CONNECTOR	STN. STL.	B-14312
13	PW-29	1	EXPANSION LOOP	STN. STL.	B-14312
14	PW-33	1	TOP ADAPTOR	STN. STL.	B-14312
15	PW-33	1	BOTTOM ADAPTOR	STN. STL.	B-14312

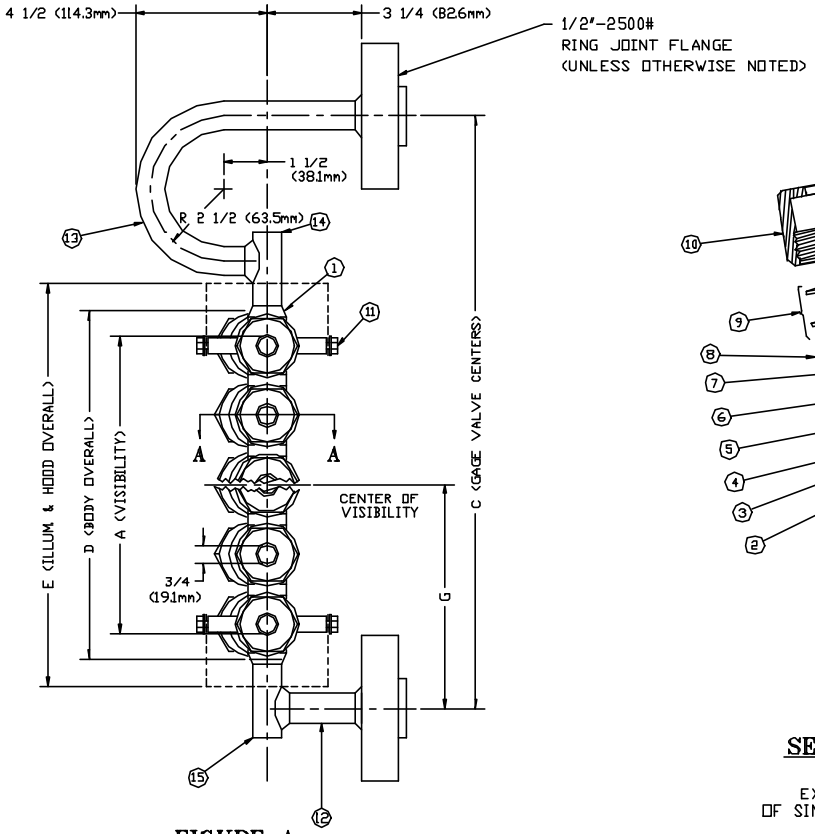

FIGURE A

FOR FLANGE CONNECTION (3000 PSI MAX)

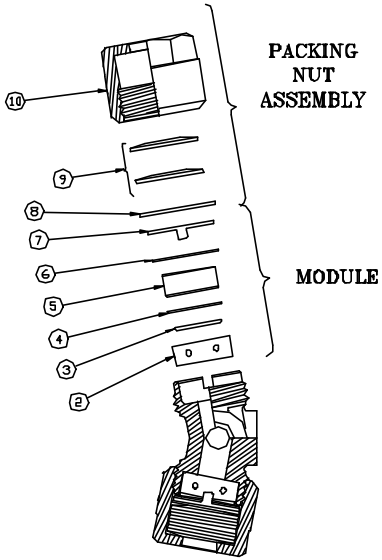

SECTION A-A

EXPLODED VIEW
OF SINGLE WINDOW UNIT

NOTES:

-- * TO COMPLETE PART NO. ADD NO. OF WINDOW UNITS

-- ITEMS 2 THRU 10 FORM ONE COMPLETE ASSEMBLY OF SINGLE WINDOW UNIT

-- ITEMS 2 THRU 7 COMPRISE A REPLACEMENT PACKAGE CALLED A MODULE, TO BE ORDERED AS PART NO. PW-24R (SEE EXPLODED VIEW)

-- ITEMS 8 THRU 10 COMPRISE A PACKING NUT ASSEMBLY, TO BE ORDERED AS PART NO. PW-68 (SEE EXPLODED VIEW)

-- ASSEMBLY OF ILLUMINATOR & HOOD ON GAGE REF. DWG. AB-14916

ITEM	PART NO.	DWG. NO.
SIMPLIPORT ILLUMINATORS:		
STANDARD	PI*	B-9131
WEATHERPROOF	PIW*	B-9133
EXPLOSION-PROOF	PIW*EP	B-10034
SIMPLIPORT HOODS:		
OPEN-END WEATHERPROOF	PHOW*	1-15-62
DIRECT-VISION WEATHERPROOF	PHOW*	B-10547
PERISCOPE-WEATHERPROOF	PHPW*	B-9133
PERISCOPE-WEATHERPROOF WITH SOCKET DUCT	PHPWS*	B-9134
PERISCOPE-WEATHERPROOF WITH FLANGED DUCT	PHPWF*	B-9134

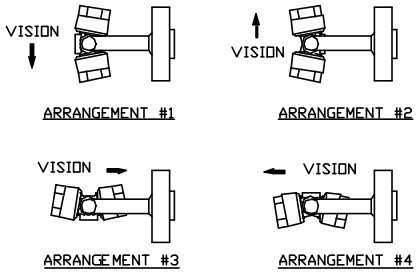

PLEASE SELECT ARRANGEMENT REQUIRED

NOTE: FOR ARRANGEMENTS #3 & #4, CONSULT FACTORY FOR MIN. CENTERS

PATENT NO. 3,187,573
DESIGN PRESSURE 3000 PSI
HYDROTEST AT 4500 PSI

REV	DESCRIPTION	DATE	SIG
3	UPDATED MODULES AND NUTS	2/16/04	ST

REVISIONS

UNLESS OTHERWISE NOTED:
TOLERANCES (±)
DECIMAL & STOCK (.002)
FIN. FRACTIONAL (UP TO 1", NOT INCL.) (.010)
FIN. FRACTIONAL (1" INCL., UP TO 3") 1/64
FIN. FRACTIONAL (3" INCL., UP TO 6") 1/32
FIN. FRACTIONAL (6" INCL., UP TO 12") 1/16
FIN. FRACTIONAL (12" & OVER) 1/8
ANGLES 1°
MACHINE FINISH- 125√ OR SMOOTHER
REMOVE BURRS AND SHARP EDGES

CLARK-RELIANCE CORP.
STRONGSVILLE, OHIO, U.S.A.

SIMPLIPORT GAGE ASS'Y W/
EXPANSION LOOP & FLANGED
CONNS. 0-3000 WSP

MATERIAL
SEE INDIVIDUAL PART DRAWINGS

DRAWN ST	SCALE NONE
CHKD.	DATE 2/16/04

DRAWING NO. B15281 REV. 3